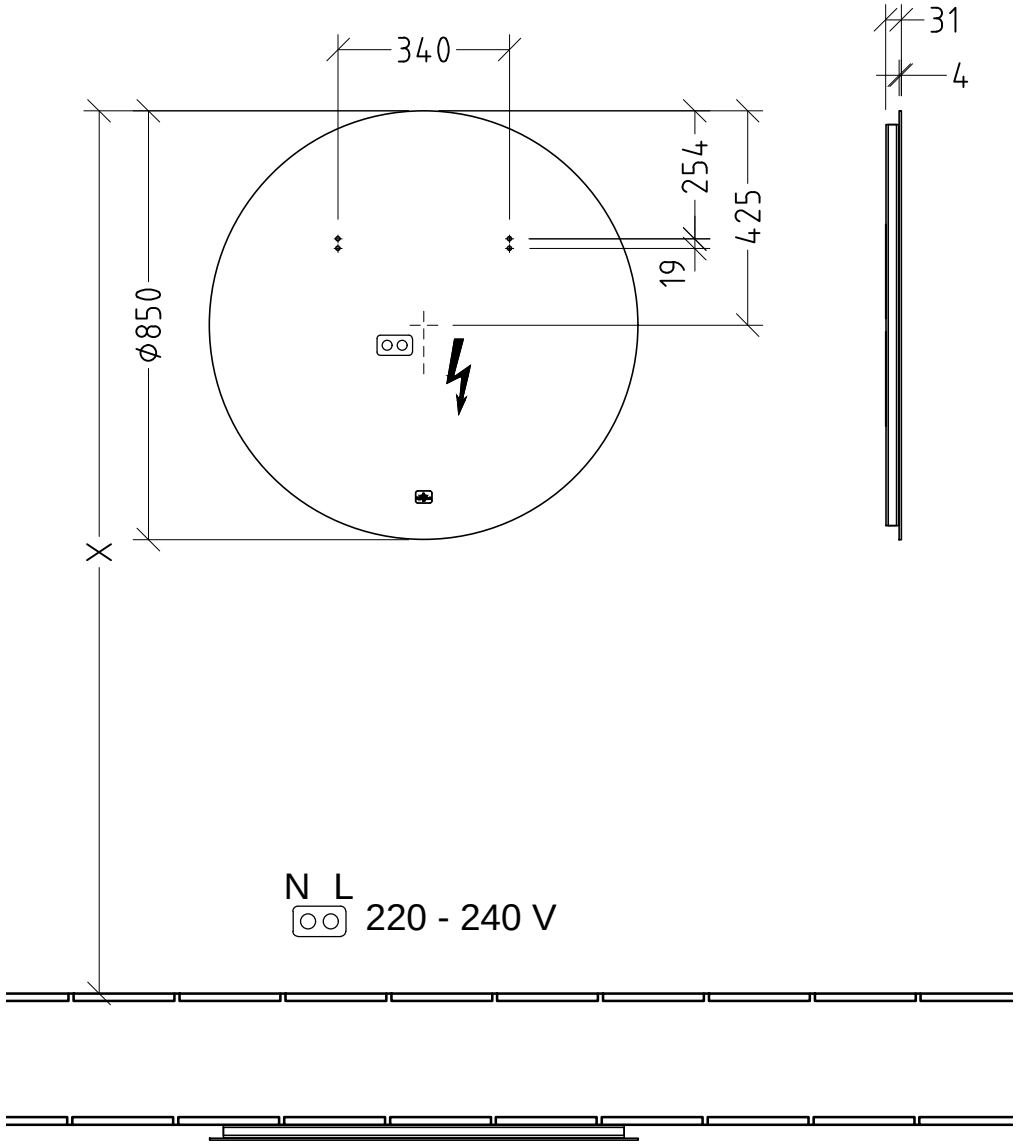

More to See Lite A4608500	Villeroy & Boch 1748
V01 / 07.10.2020	